FINAL REPORT
TWO-WHEELED SELF-BALANCING ROBOT

GROUP 16: Allan Ramirez, Daehyun Kim, Emoni Gilbreath, Ha Nguyen, Youngjae Kwon

1. Opportunity

The two-wheeled self-balancing robot addresses the opportunity of providing a compact, joystick-controlled platform capable of stable upright mobility. It enables intuitive forward, backward, and rotational movements while preventing unintended drift through joystick thresholds. By emphasizing stability, precise speed control, and responsive directional changes, the robot is well-suited for demonstrations, educational purposes, and as a foundation for future autonomous or robotic applications.

2. High-level Strategy

- The high-level strategy for the two-wheeled self-balancing robot is to maintain upright stability while providing intuitive joystick-controlled motion. The robot uses encoder feedback and a PI-control loop to regulate wheel speeds, translating joystick inputs into forward, backward, and rotational movements. Joystick thresholds and deadzones prevent unintended drift, ensuring precise and responsive control. The high gear ratio prioritizes torque and balance over speed, allowing the robot to maintain stability even under disturbances.
- Initially, the goal was simply to move the robot forward and backward while maintaining balance. After successfully achieving that, rotational movement was added to allow left and right turns. While the original speed target may have been around 30 cm/s, the realized robot moves much more slowly due to the 250:1 gear ratio, achieving only 20 cm/s. Despite the low speed, the robot meets its primary objectives of stable upright balance and responsive directional control.

3. Physical Device (photo)

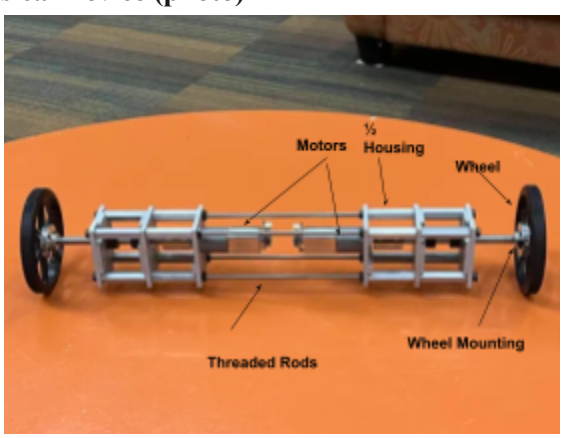

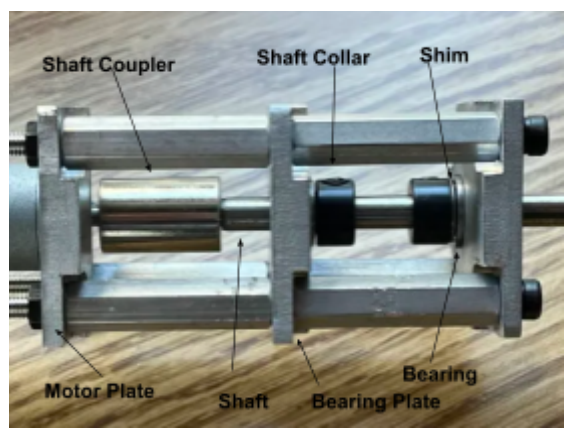

4. **Function-critical Decisions, Calculations**

The function-critical decisions for the two-wheeled self-balancing robot focused on motor and gearbox selection, and wheel size as these elements directly determine whether the robot can support its weight, maintain balance, and achieve controlled motion.

- The robot has a mass of approximately 1 kg, so the total gravitational force is:
  $F = mg = 1 \cdot 9.81 = 9.81$ N
- Assuming equal load distribution, each wheel supports about 0.5 kg:
  $F_{per\ wheel} = 0.5 \cdot 9.81 = 4.905$ N
- With wheel diameter 80 mm (radius r = 0.04 m), the torque required at each wheel to overcome gravity and initiate motion is approximately:
  $\tau_{required} = F_{per\ wheel} \cdot r = 4.905 \cdot 0.04 \approx 0.196$ Nm
- The selected DC gear motors have a 250:1 gear ratio and the following manufacturer-specified output torques at 6 V:
  - Torque at maximum efficiency: 2.1 kg·cm
  - Stall torque: 12 kg·cm

  Converting to SI units:

  $1\ kg \cdot cm = 0.0981$ Nm

  $\tau_{max\ eff} = 2.1 \cdot 0.0981 \approx 0.206$ Nm

  $\tau_{stall} = 12 \cdot 0.0981 \approx 1.18$ Nm

  The torque at maximum efficiency (0.206 Nm) slightly exceeds the calculated required torque (0.196 Nm), indicating that the motors can operate efficiently while meeting load demands. The much higher stall torque provides a substantial safety margin for rapid balance corrections and external disturbances, which is critical for a self-balancing robot.
- Speed calculation:
  + The selected DC gear motors have a no-load output speed of 57 RPM and a speed of 47 RPM at maximum efficiency, both measured at the gearbox output (after the 250:1 reduction). The wheels have a diameter of 80 mm, giving a circumference of: $C = \pi D = \pi \cdot 0.08 \approx 0.251$ m
  + No-load linear speed: $v_{no\text{-}load} = C \cdot RPM / 60 = 0.251 \cdot 57 / 60 \approx 0.238$ m/s ≈ 23.8 cm/s
  + Speed at maximum efficiency: $v_{max\ eff} = 0.251 \cdot 47 / 60 \approx 0.197$ m/s ≈ 19.7 cm/s

  Based on the motor's rated speed and wheel size, the robot achieves a maximum efficient linear speed of approximately 20 cm/s, which is appropriate for stable self-balancing operation while maintaining sufficient torque margin.

5. Circuit Diagram, State Transition Diagram

- Circuit Diagram:

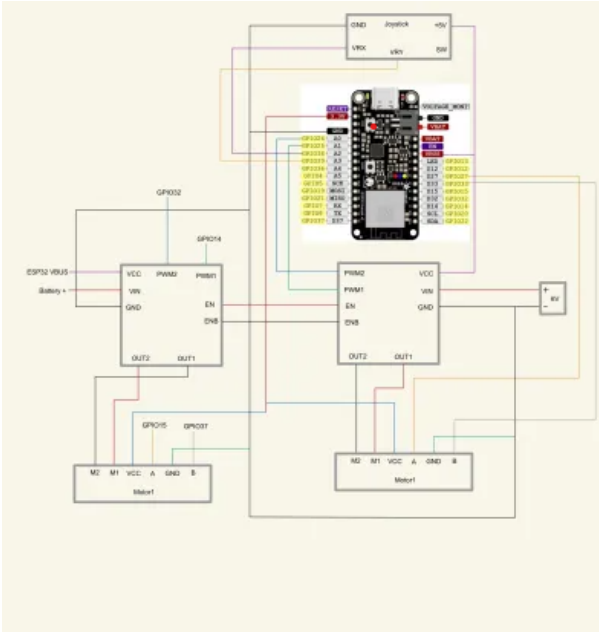

- State Transition Diagram:

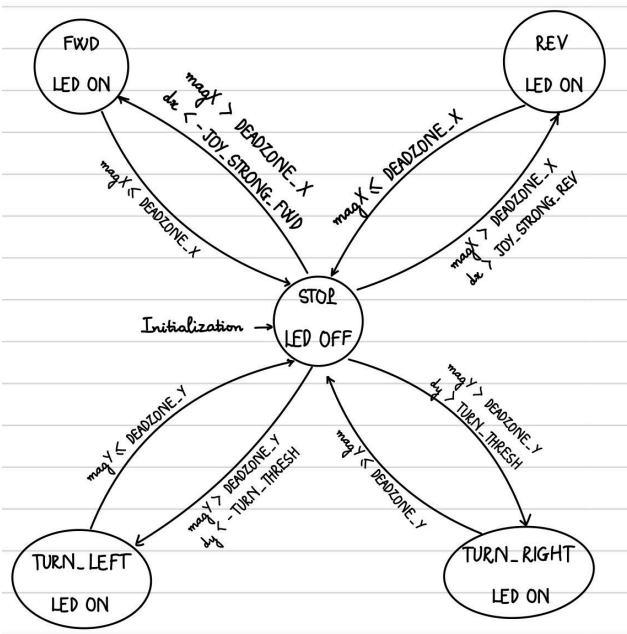

6. **Reflection**
   - One strategy that worked well was prioritizing torque and closed-loop control early, which made balancing reliable and simplified later tuning. In hindsight, we wish we had planned for expandability by selecting larger wheels and reserving more ESP32 pins for features like ultrasonic sensors or a dedicated start/stop button, which would have made the system more versatile.
   - Another idea we had was to add a camera so that the customers would be able to watch our robot as it travels from one point to another. Also, using sensors that would detect if an object was in its path and have our robot change direction to avoid bumping into people or objects as it moves.

Appendices

- Bill of Materials

name	detail	website	price	qty
wheel	Pololu Wheel 80×10mm Pair - Black	https://www.pololu.com/product/1430	$8.75	1
wheel mounting	Pololu Universal Aluminum Mounting Hub for 1/4" (6.35mm) Shaft, M3 Holes (2-Pack)	https://www.pololu.com/product/1994	$12.95	1
shaft	12L14 Carbon Steel, 1/4" Diameter, 4" Long	https://www.mcmaster.com/1327K114/	$4.67	2
bearing	Flanged, Shielded, Trade Number R188-2Z	https://www.mcmaster.com/57155K323/	$6.27	4
shaft collar	for 1/4" Diameter, Black-Oxide 1215 Carbon Steel	https://www.mcmaster.com/9414T6/	$1.85	4
shim	18-8 Stainless Steel Ring Shim, 0.002" Thick, 1/4" ID	https://www.mcmaster.com/98126A161/	$8.31	1
Belleville Disc Spring	for 1/4" Shaft Diameter, 0.255" ID, 0.5" OD, 0.0180" Thick	https://www.mcmaster.com/9712K61/	$7.41	1
shaft coupler	4mm to 4mm	https://www.amazon.com/Coupling-Stainless-Connector-Printers-Accessories/d	$7.98	1
Female Threaded Hex Standoff	8mm Hex, 35mm Long, M4 x 0.70 mm Thread	https://www.mcmaster.com/95947A539/	$2.29	8
MF Threaded Hex Standoff	8mm Hex, 35mm Long, M4 x 0.70 mm Thread	https://www.mcmaster.com/98952A447/	$2.80	8
M4 x 160mm Fully Threaded Rod & Studs	M4 x 160mm Fully Threaded Rod & Studs, 304 Stainless Steel Threads Rods, M4-0.7	https://www.amazon.com/HiPicco-M4-170mm-Threaded-Stainless/dp/B0DH32	$10.79	1
Motor	250:1 Metal Gearmotor 20Dx46L mm 6V CB with Extended Motor Shaft	https://www.pololu.com/product/3720	$36.95	2
Motor Drive	TB9051FTG Single Brushed DC Motor Driver Carrier	https://www.pololu.com/product/2997	$12.95	2
Encoder	Magnetic Encoder Pair Kit with Side-Entry Connector for 20D mm Metal Gearmotors, 20 CPR, 2.7-18V	https://www.pololu.com/product/5661	$8.95	1
Encoder Cable	JST PH-Style Cable, 6-Pin, Female-Female, 10cm	https://www.pololu.com/product/5643	$3.23	2
Joystick	6PCS Game Joystick Control Stick Sensor KY-023 Dual-Axis Button Joystick for PS2 Arduino	https://a.co/d/c7RNIwJ	$6.69	1
Battery Holder	SDTC Tech 2-Set 4X 1.5V AA Battery Holder and I Type Snap Connector Kit 6 Volt Thicken Plastic Battery Case Box	https://www.amazon.com/gp/product/B0858Y4JPL/ref=ewc_pr_img_3?smid=A	$7.49	1
ESP32			$0.00	1
Breadboard			$0.00	1

- CAD (prototype)

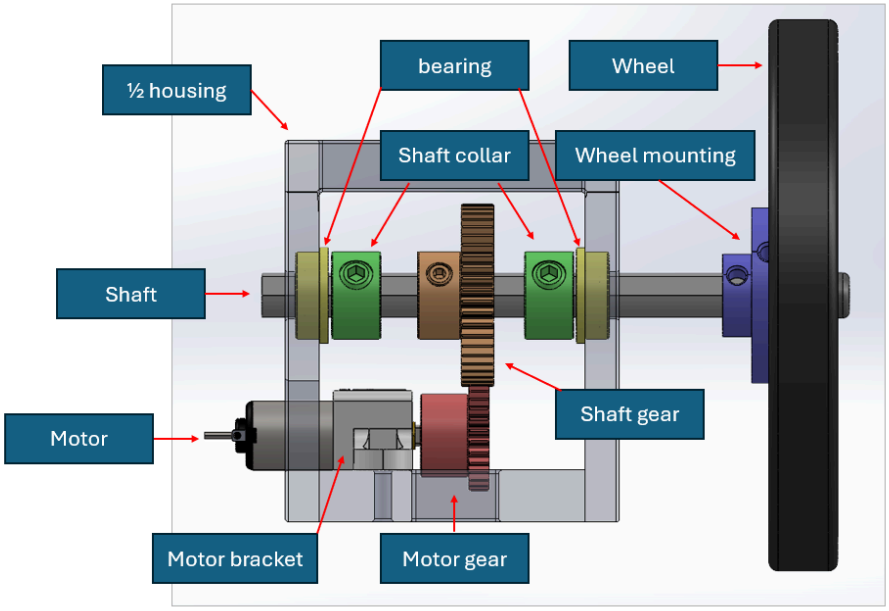

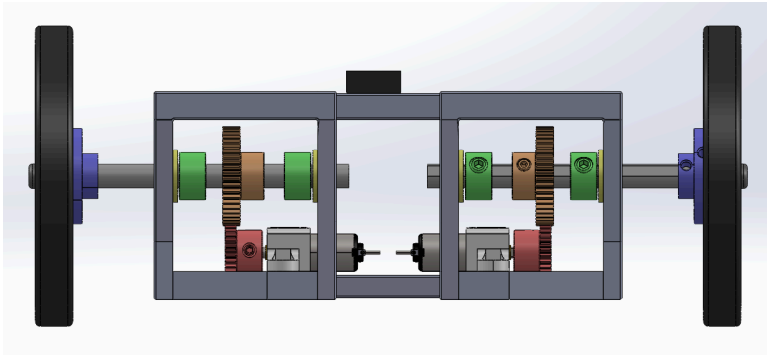
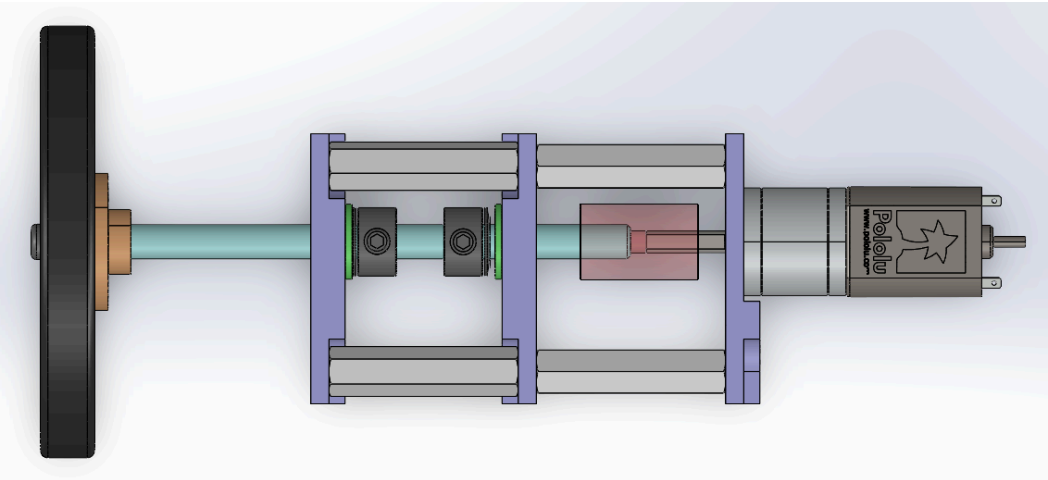
- CAD (final version)